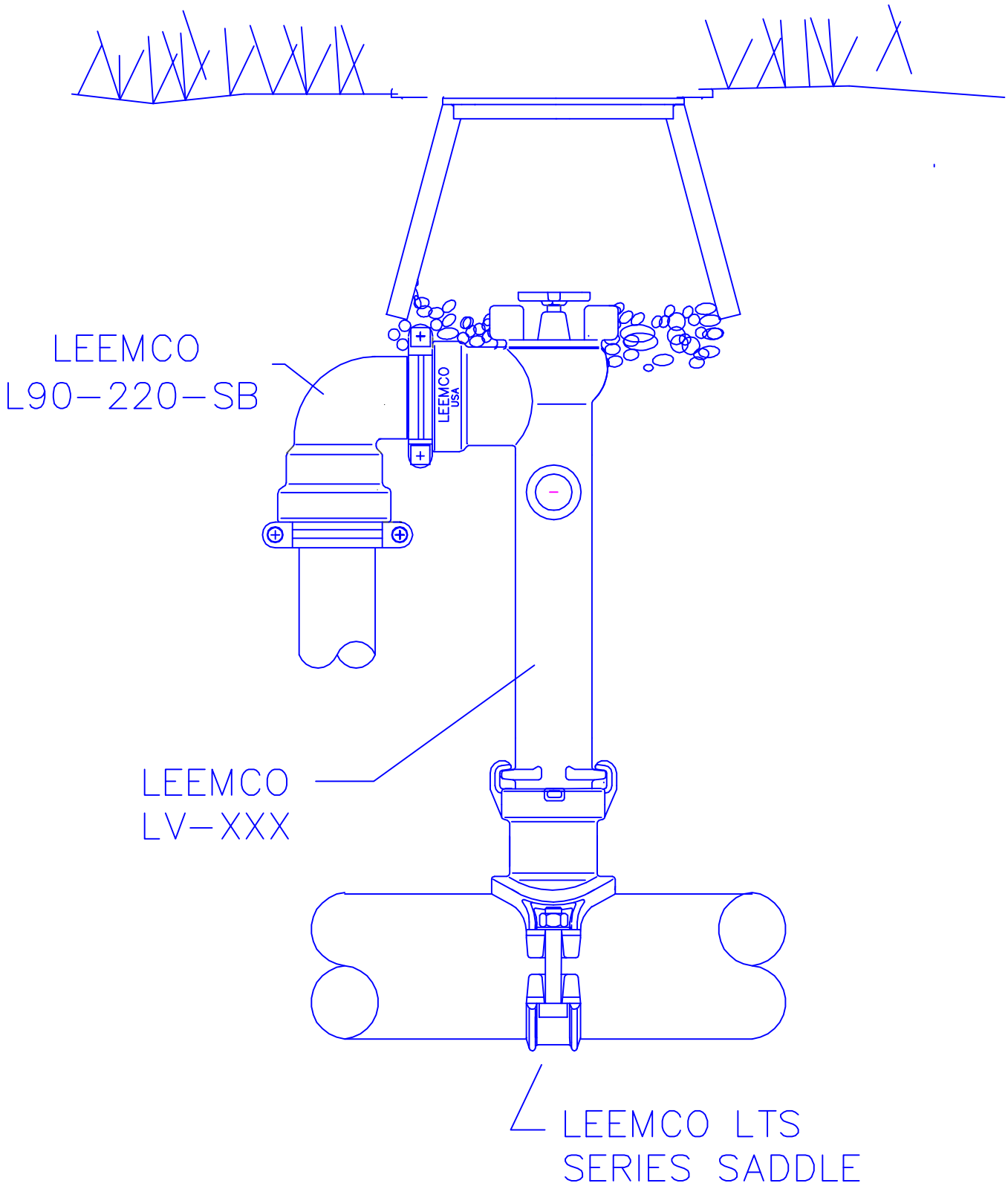
LEEMCO
L90-220-SB
LEEMCO
USA
LEEMCO
LV-XXX
LEEMCO LTS
SERIES SADDLE